90-W ADAPTER WITH VARIABLE-FREQUENCY SINGLE-STAGE PFC FLYBACK CONVERTER

April, 2002

KEY CHARACTERISTICS

- Input: 90-264 V_{rms}, 50/60 Hz
- Output: 20V, 4.5A
- Worst-case efficiency
  (low line, full load) ~ 88%

4. Line current harmonics satisfy standard requirements with large margin (>20%)
5. Bulk voltage always below 400 V
6. Input power at 240 Vrms, no load ~ 700 mW

PRESENTATION OUTLINE

- Circuit diagram
- Circuit operation
- Experimental circuit
- Measurements
- Experimental waveforms
- Summary

MEASUREMENTS

- **Power factor, THD, bulk voltage, and efficiency at full load (20V, 4.5A)**

V_{in} [V_{rms}]	PF	THD [%]	V_B (DVM)	V_B (Scope)	η [%]
90	0.913	41.4	121	108-131	87.9
100	0.913	42.2	136	124-146	88.5
115	0.917	41.4	158	148-167	89.1
132	0.920	40.8	183	175-191	89.5
180	0.908	44.1	258	250-264	89.7
200	0.900	45.7	291	284-296	89.6
230	0.891	47.3	339	332-344	89.2
264	0.879	48.5	394	388-396	88.5

MEASUREMENTS (Cont'd)

- **Line current harmonics at full load (20V, 4.5A)**

No.	Line-current harmonics [% of IEC-1000-3-2 Class-D Limit]	
	V_{in}= 100 V_{rms}	V_{in}= 230 V_{rms}
3	50.9	60.7
5	20.0	12.6
7	19.2	7.7
9	76.9	15.4
11	77.7	4.8
13	60.2	13.2
15	46.8	10.1
17	44.0	2.0
19	32.9	4.6
21	22.1	7.9
23	22.1	1.7
25	18.5	8.9
27	16.6	5.2
29	15.0	1.0
31	10.2	6.0
33	9.9	3.8
35	6.7	5.2
37	5.5	10.1
39	7.8	39.6

EXPERIMENTAL WAVEFORMS

- **Line voltage, line current, and bulk voltage at nominal low and high lines, full load (20V, 4.5A)**

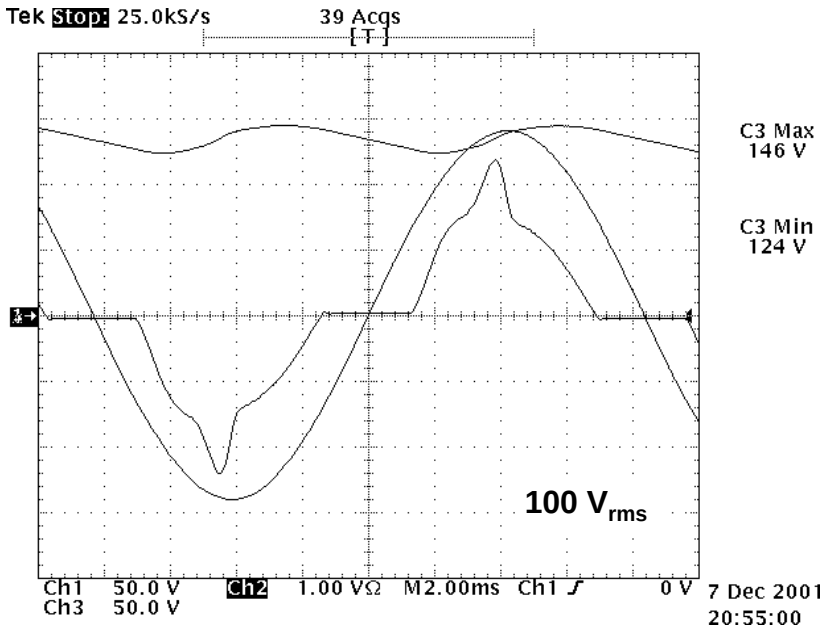

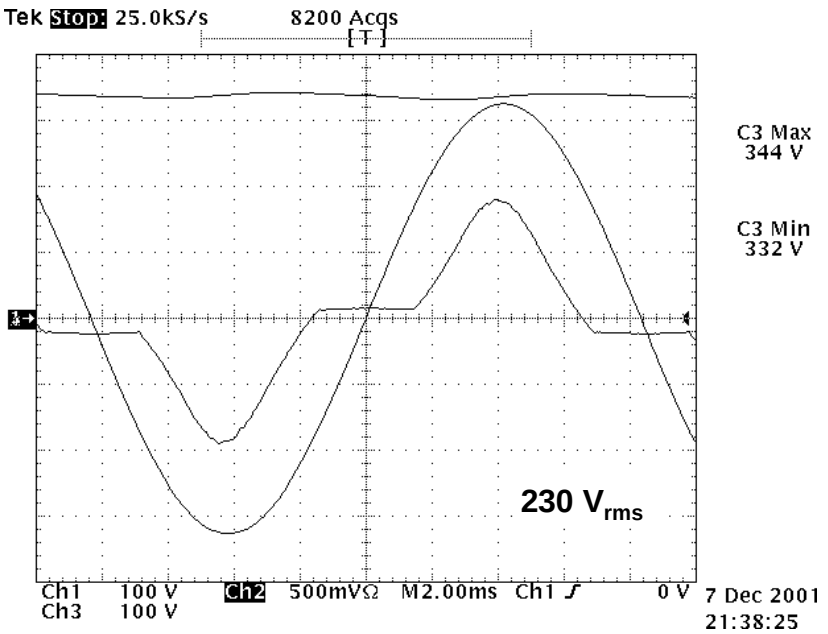

EXPERIMENTAL WAVEFORMS (Cont'd)

- **Line voltage, line current, and bulk voltage at high line (264 V_{rms}) versus load current**

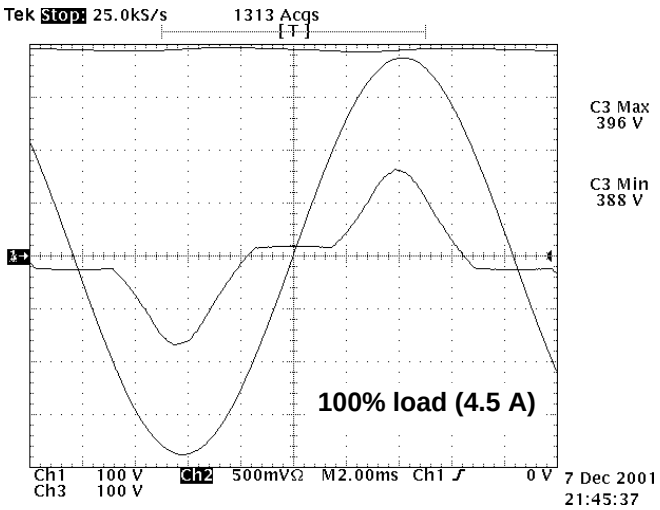

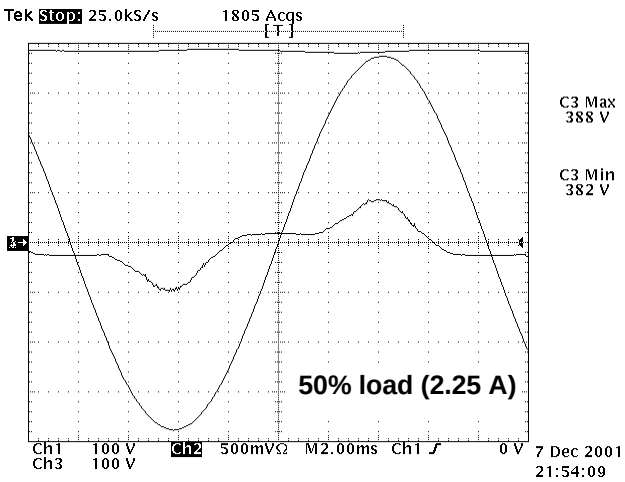

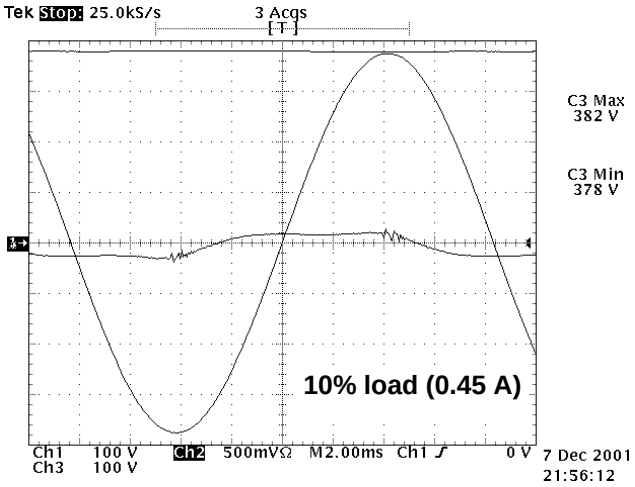

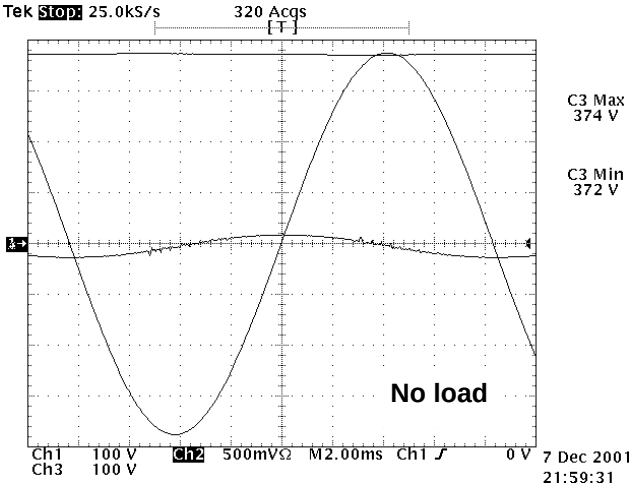

- – **Bulk voltage always below 400 V**
- – **Bulk voltage does not increase with decreasing load**

EXPERIMENTAL CIRCUIT

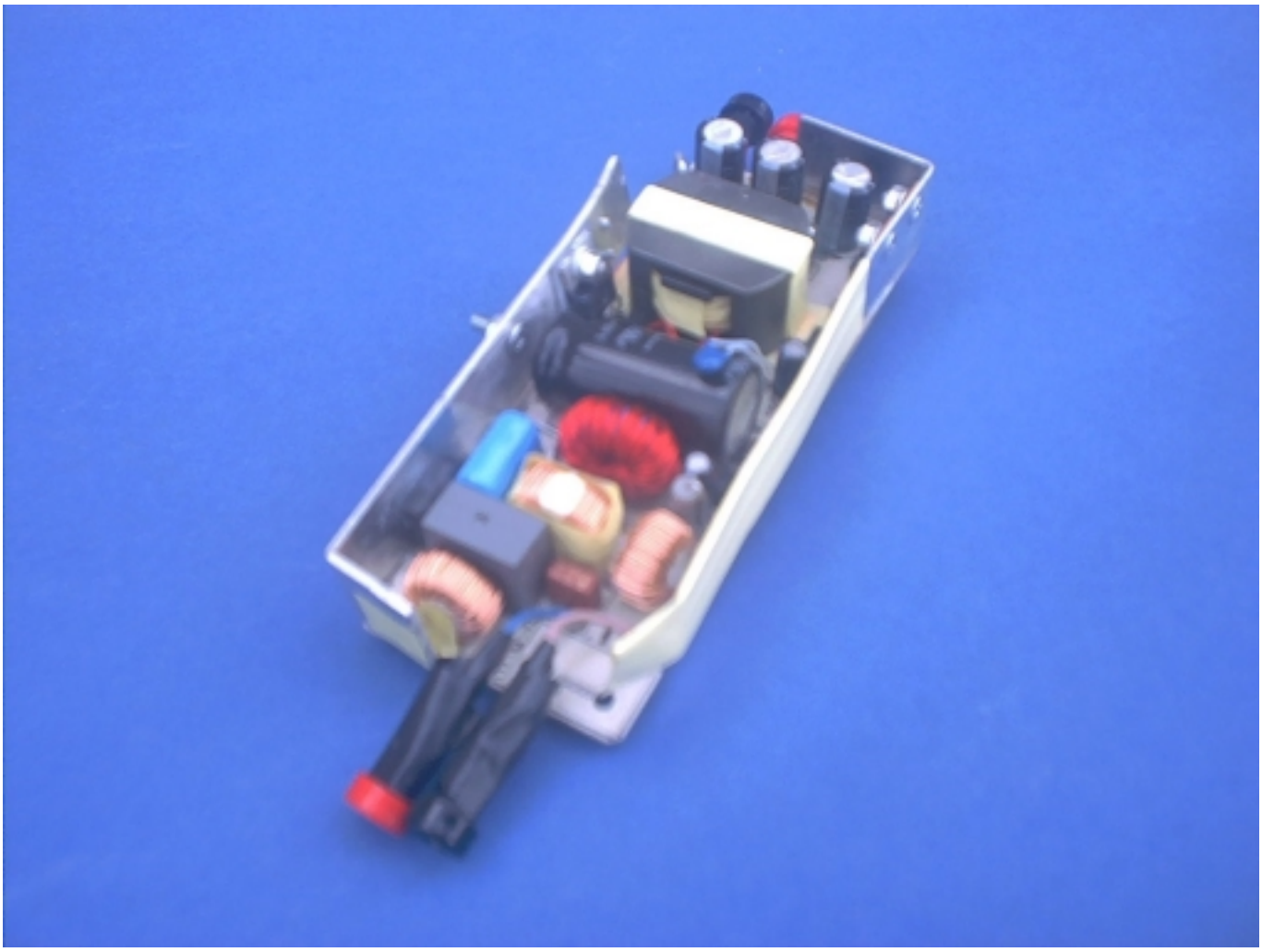

SUMMARY

- Comparison with corresponding 2-stage PFC flyback adapter
  - Similar performance
  - Smaller size
  - Lower cost
- S2PFC flyback technology can be used for adapters from 70 W to ~ 120 W

CIRCUIT DIAGRAM

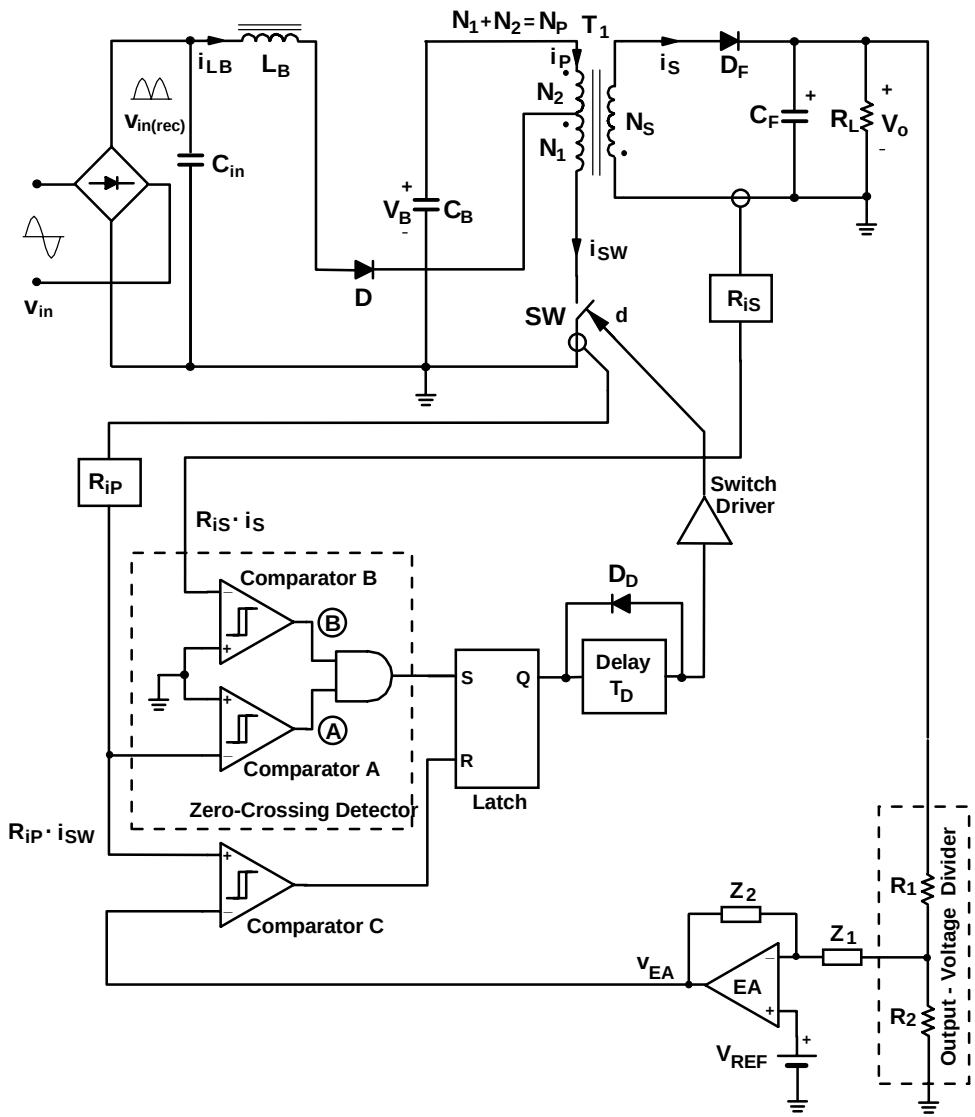

- S^2PFC flyback converter with center-tapped primary winding (US Patent No 5991172, 1999, Delta)
- Flyback transformer operates at DCM/CCM boundary
  - Variable switching frequency (No clock)
  - Detection of DCM/CCM boundary by sensing zero-crossing of i_S
  - Switch turn-on delayed after i_S crosses zero → ZVS
  - Bulk voltage varies only with line voltage, not with load current
- PFC inductor L_B operates in DCM

CIRCUIT OPERATION

- **Topological Stage $T_0 - T_1$**

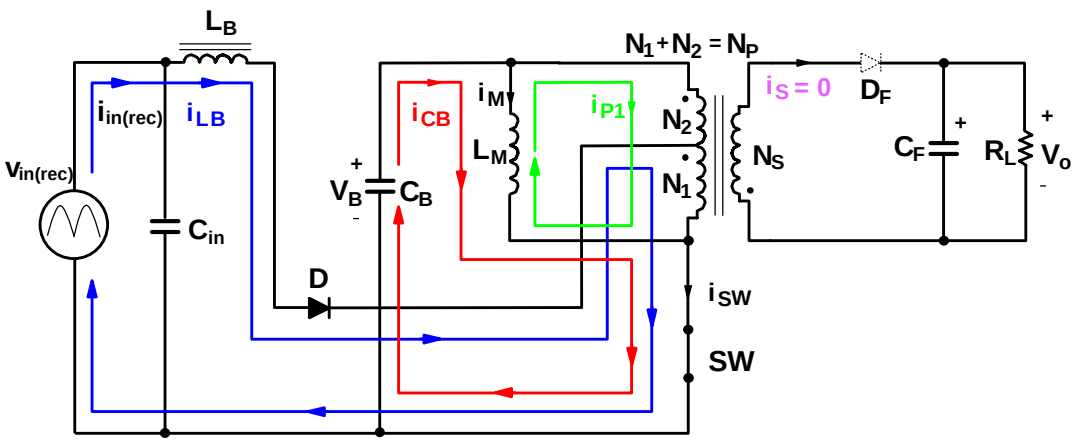

$$i_{P1} = -\frac{N_1}{N_P} i_{LB}$$

$$i_{CB} = i_M + i_{P1} = i_M - \frac{N_1}{N_P} i_{LB}$$

$$i_{SW} = i_{CB} + i_{LB} = i_M + \left(1 - \frac{N_1}{N_P}\right) i_{LB}$$

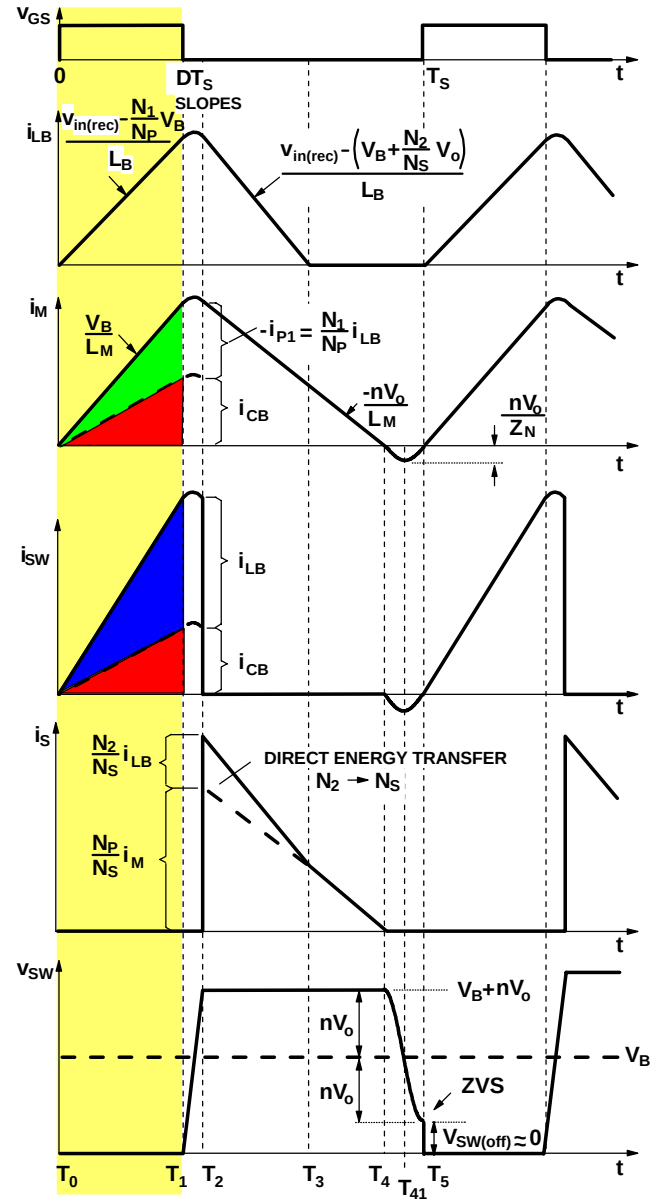

CIRCUIT OPERATION (Cont'd)

- **Topological Stage $T_1 - T_2$**

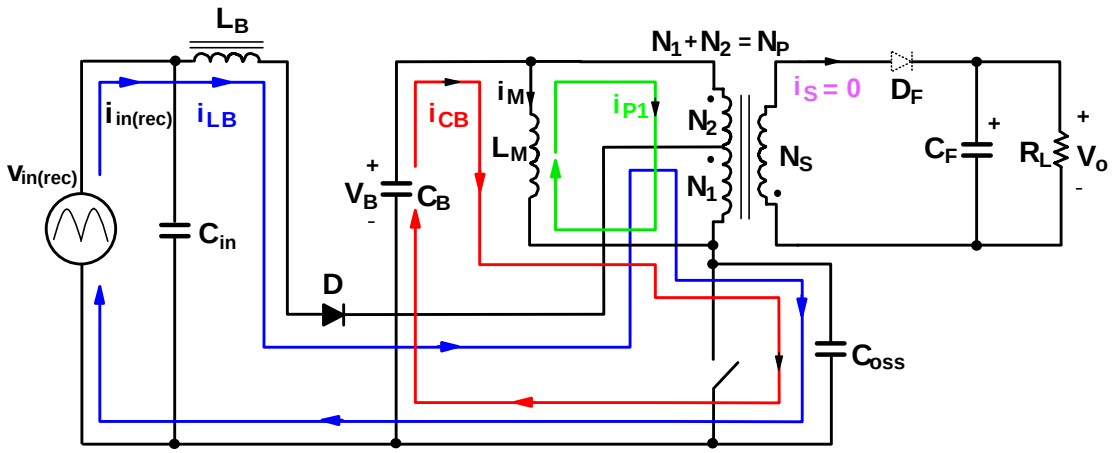

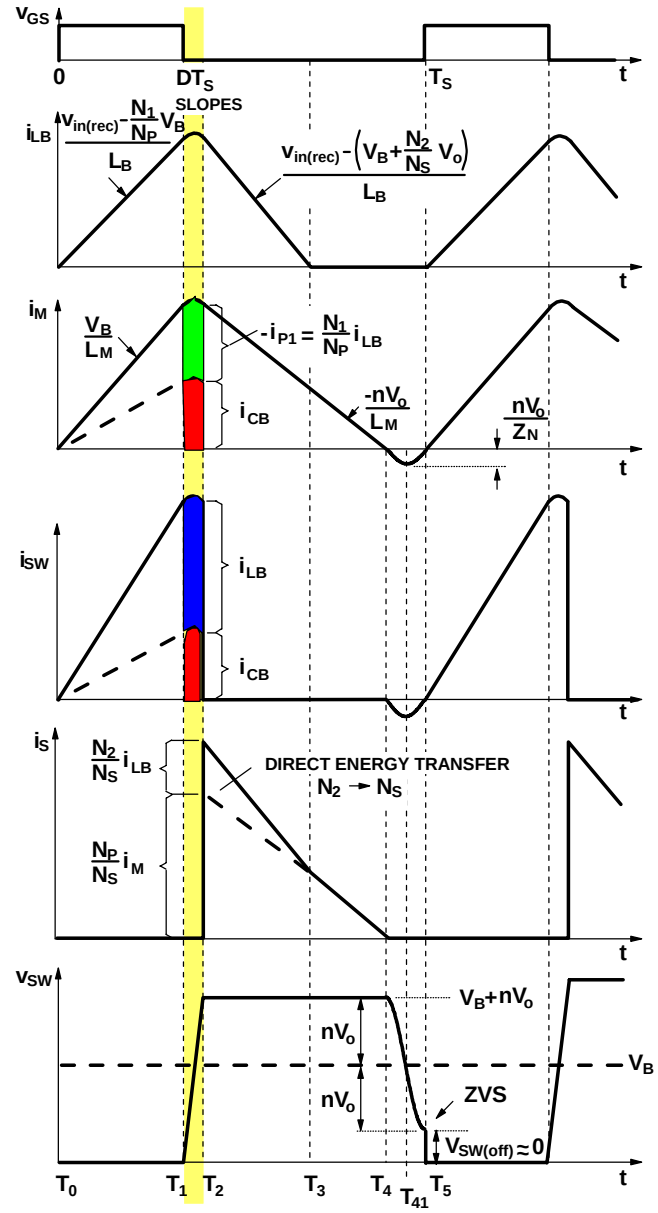

CIRCUIT OPERATION (Cont'd)

- **Topological Stage $T_2 - T_3$**

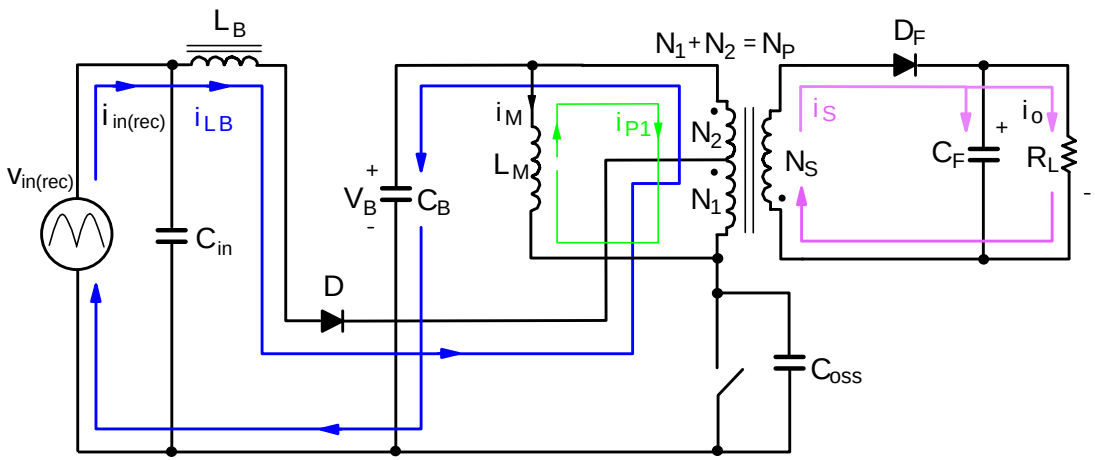

$$i_{P1} = -i_M$$

$$i_S = \frac{N_P}{N_S} i_M + \frac{N_2}{N_S} i_{LB}$$

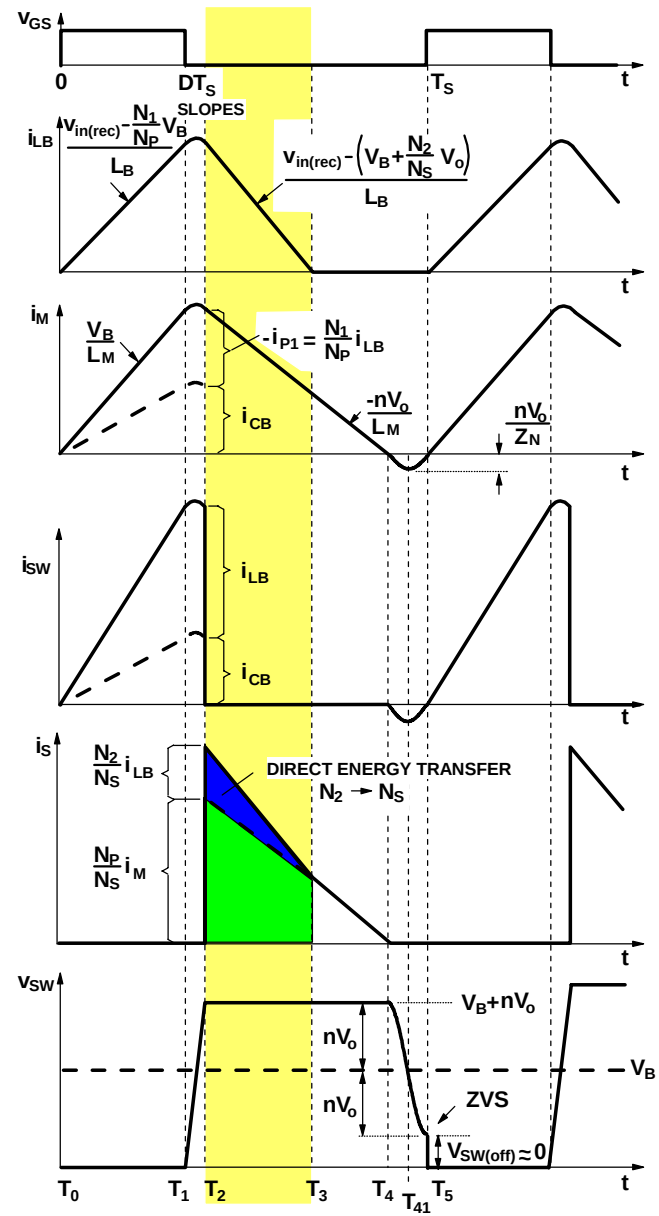

CIRCUIT OPERATION (Cont'd)

- **Topological Stage $T_3 - T_4$**

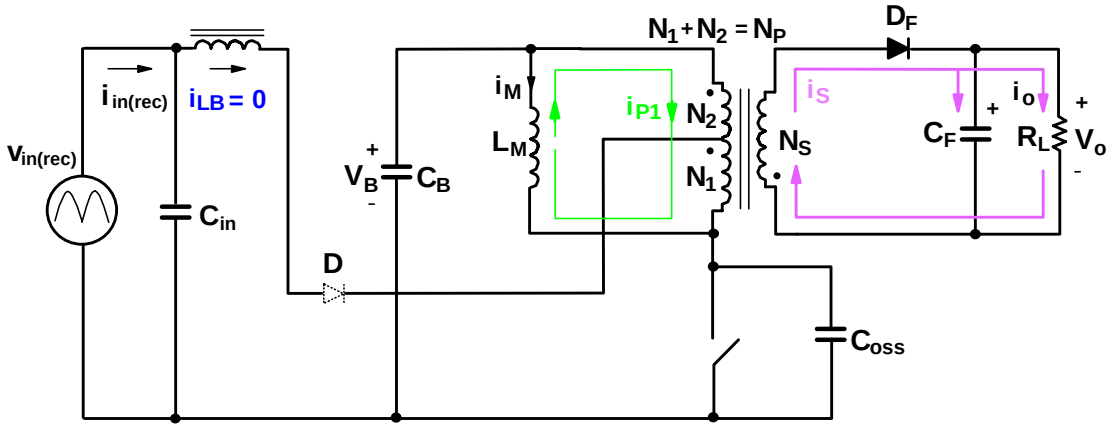

$$i_{P1} = -i_M$$

$$i_S = \frac{N_P}{N_S} i_M$$

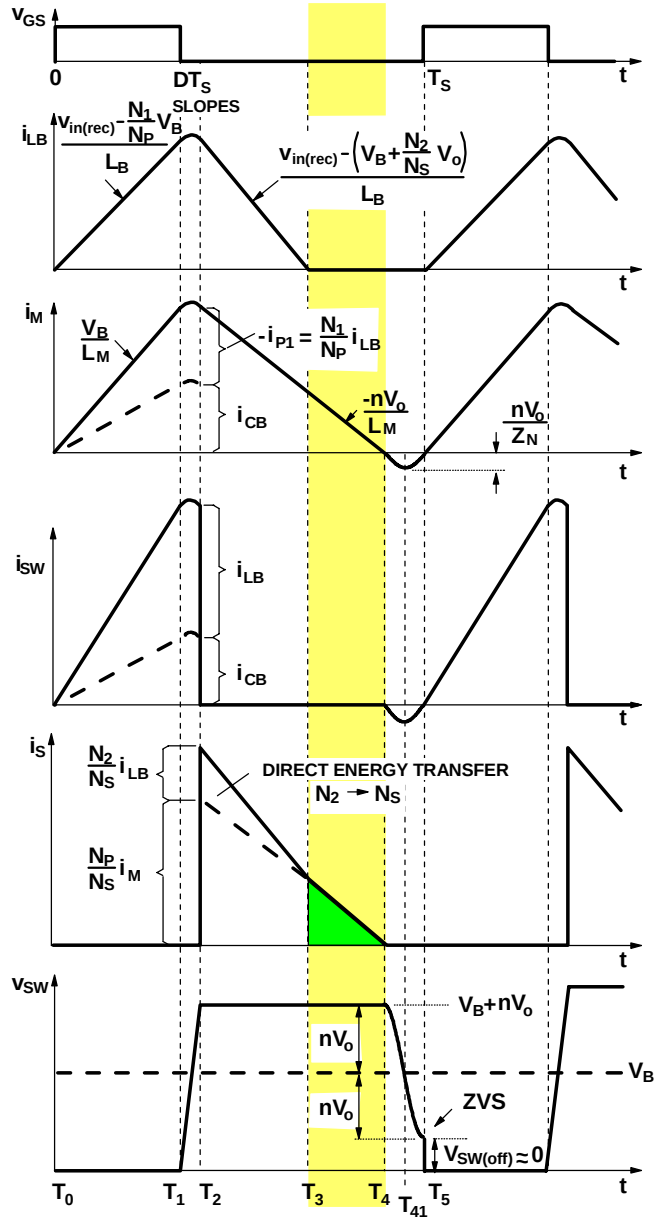

CIRCUIT OPERATION (Cont'd)

- **Topological Stage $T_4 - T_5$**

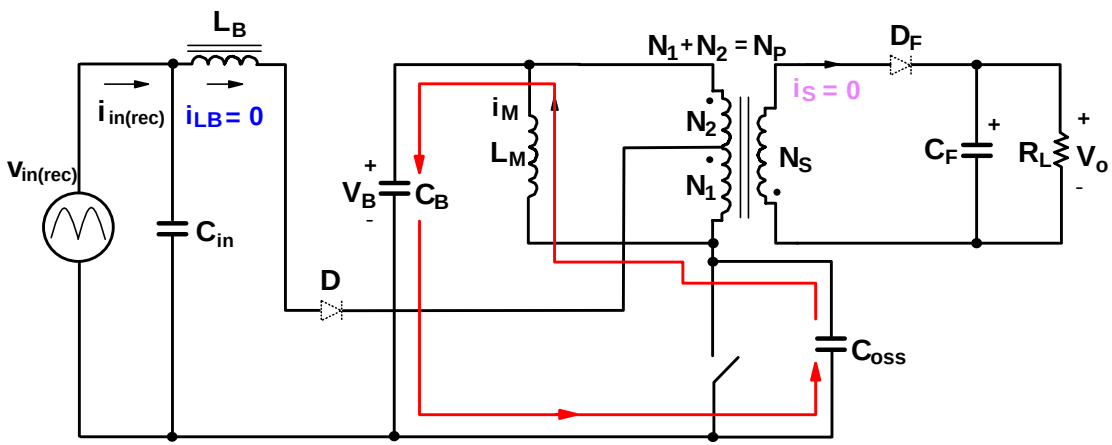

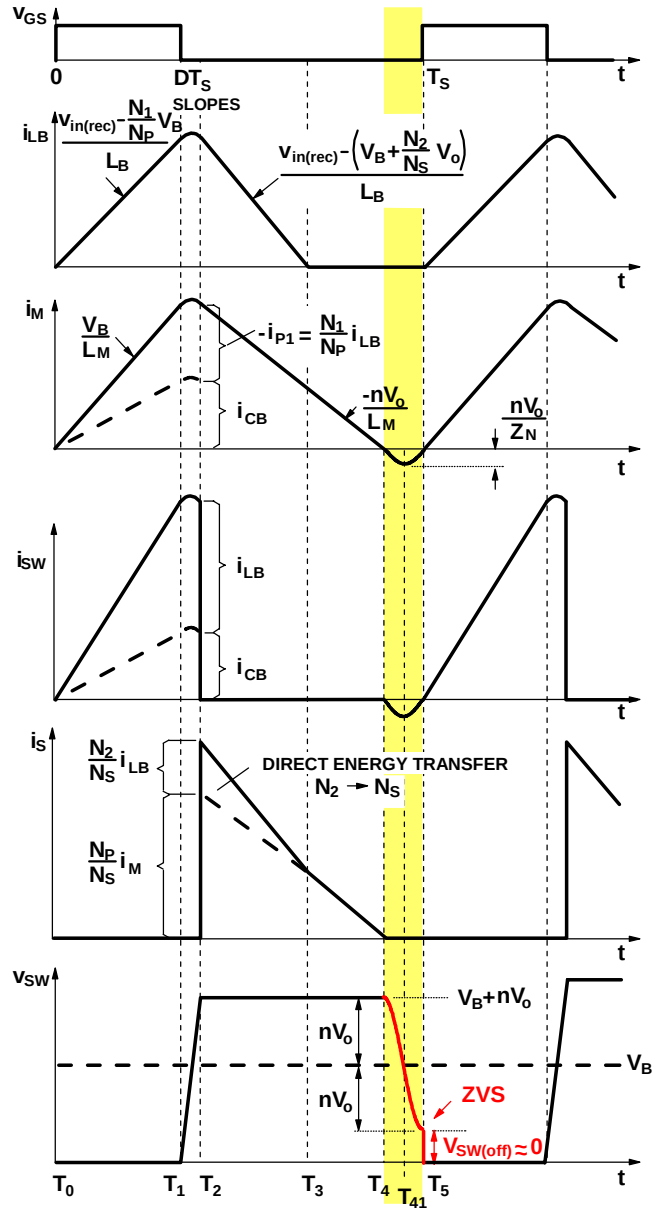

CIRCUIT DIAGRAM (Cont'd)

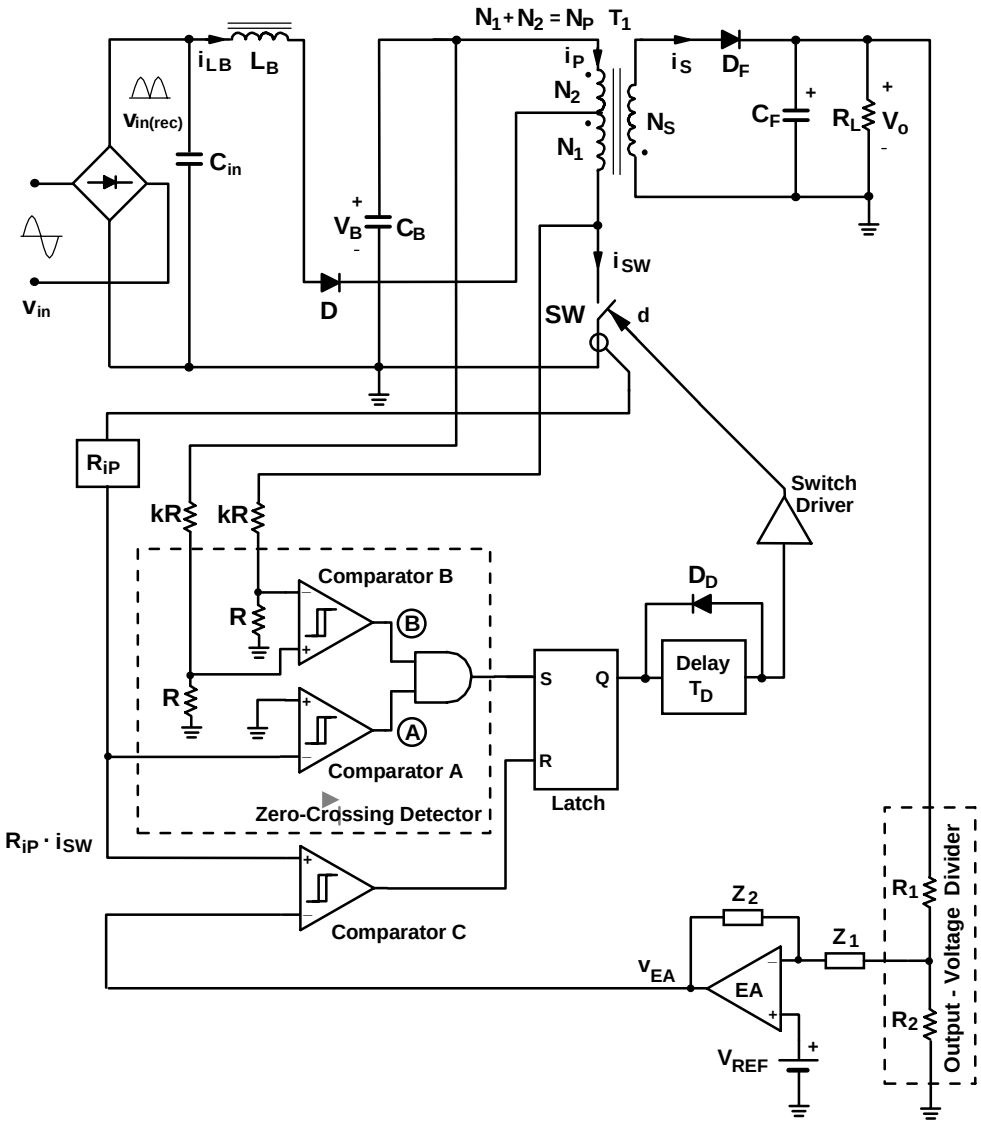

- **Detection of DCM/CCM boundary of flyback transformer by sensing primary voltage**

EXPERIMENTAL CIRCUIT DIAGRAM

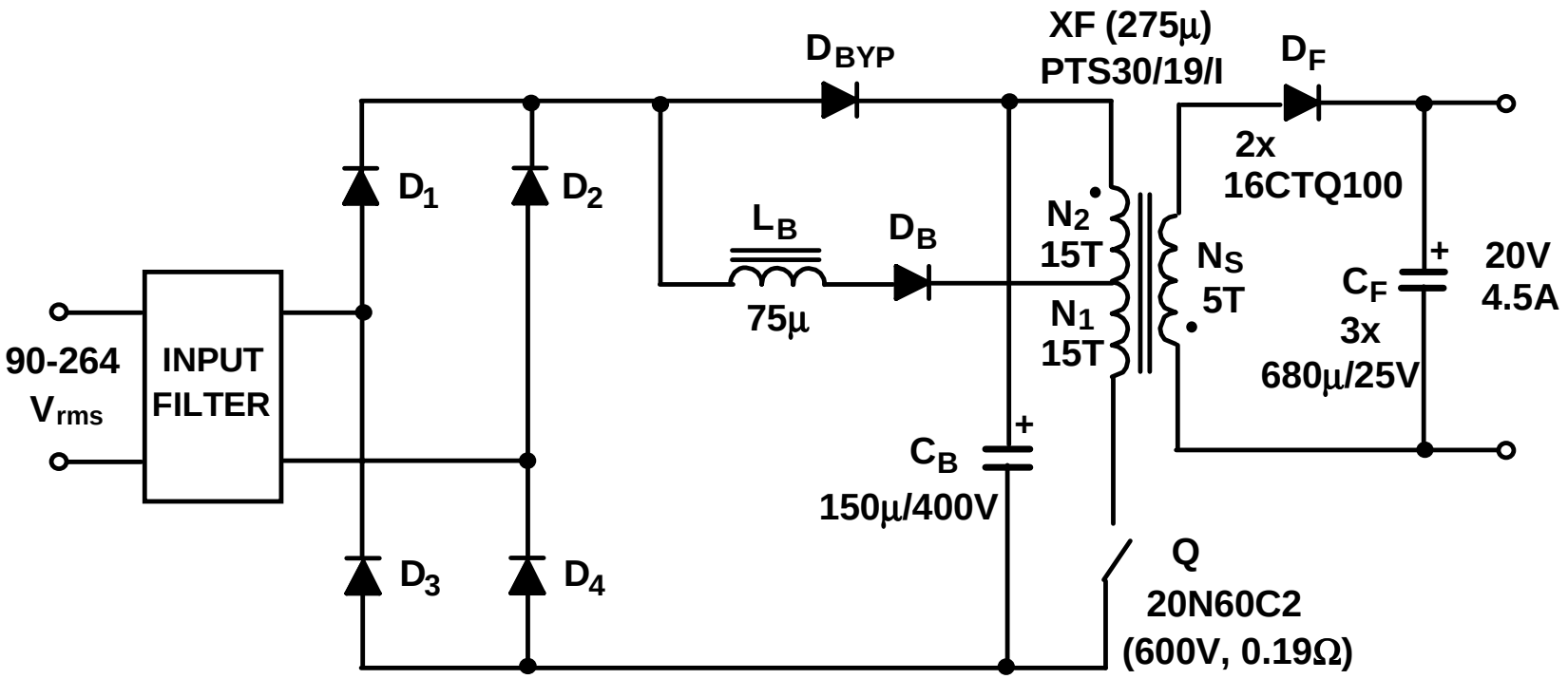

- Control circuit based on L6565 (ST)
- Detection of DCM/CCM boundary of flyback transformer by sensing primary voltage

EXECUTIVE SUMMARY

Key characteristics of the 90-W adapter with S2PFC flyback can be summarized as follows:

1. Worst-case efficiency (low line, full load) ~ 88% - see Table I;
2. Line current harmonics satisfy the standard requirements with a large margin (>20%) –see Table II;
3. Bulk voltage is always below 400 V:
   a) Maximum bulk voltage (at high line and full load) is 396 V – see Fig. 19(a),
   b) Bulk voltage at high line and no load is 374 V – see Fig. 19(d);
4. Input power at 240-Vrms line voltage and no load is ~ 700 mW (670-700 mW);
5. Input power at 115-Vrms line voltage and no load is ~ 625 mW (610-640 mW);
6. Switching frequency variations:
   a) Switching frequency range at full load is 65-177 kHz,
   b) Maximum switching frequency is 228 kHz (at high line and 2.7-A load);
7. Maximum drain-source voltage is 654 V (first turn-off spike at high line) – see Fig. 20.

I. CIRCUIT DIAGRAM

A. Power Stage

The simplified circuit diagram of the original power stage [1], [2] is shown in Fig. 1. Recently, the topology of the original power stage was slightly modified, which resulted in an improved efficiency. The simplified circuit diagram of the improved power stage is shown in Fig. 2. It should be noticed that the only difference between the power stages in Figs. 1 and 2 is the position of the two diodes outside of the diode bridge (D_1-D_4). However, in the improved power stage in Fig. 2, one diode-forward-voltage drop is eliminated. Current paths of the boost (PFC) inductor, L_B, in the original and improved power stages are shown in Figs. 3 and 4, respectively. As can be seen in Fig. 3, the current paths of the boost inductor in Fig. 3 include three diodes, whereas, the current paths of the boost inductor in Fig. 4 include only two diodes. Similarly, the current paths of the bypass diode, D_{BYP} in Fig. 1, which conducts only during a short interval around the peaking of the rectified line voltage, also include three diodes, as shown in Fig. 5. In the improved power stage in Fig. 2, diode D_1 serves as the bypass diode during a positive half cycle of the line voltage, and diode D_2 serves as the bypass diode during a negative half cycle of the line voltage. Therefore, the bypass current paths in the power stage in Fig. 2 include only two diodes, as shown in Fig. 6.

To conclude, the modification of the original power stage in Fig. 1 is achieved as follows:

- Bridge diodes D_1 and D_2 were eliminated;
- Boost diode D_B was replaced with two diodes, D_{Bp} and D_{Bn} (one diode for each half cycle of the line voltage; therefore, the current stress of diodes D_{Bp} and D_{Bn} is only half of that of diode D_B); and
- Bypass diode D_{BYP} was replaced with two diodes, D_1 and D_2 (one diode for each half cycle of the line voltage; therefore, the current stress of diodes D_1 and D_2 is only half of that of diode D_{BYP}).

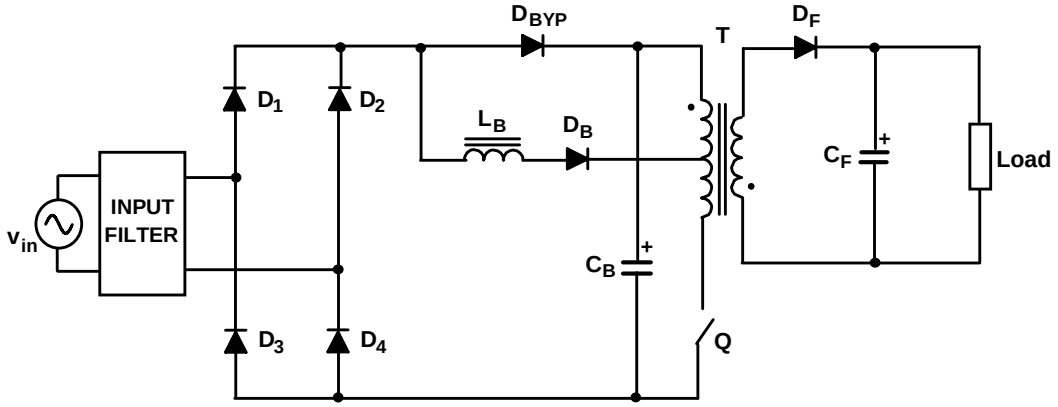

Fig. 1 Simplified circuit diagram of the original power stage [1], [2].

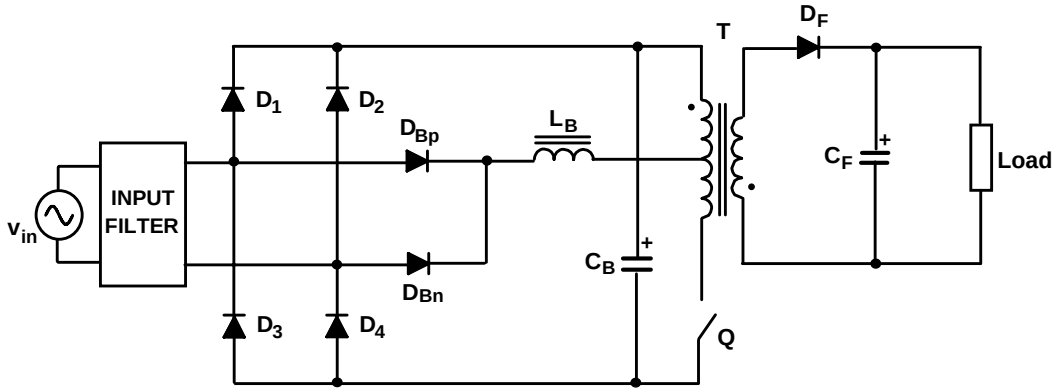

Fig. 2 Simplified circuit diagram of the improved power stage.

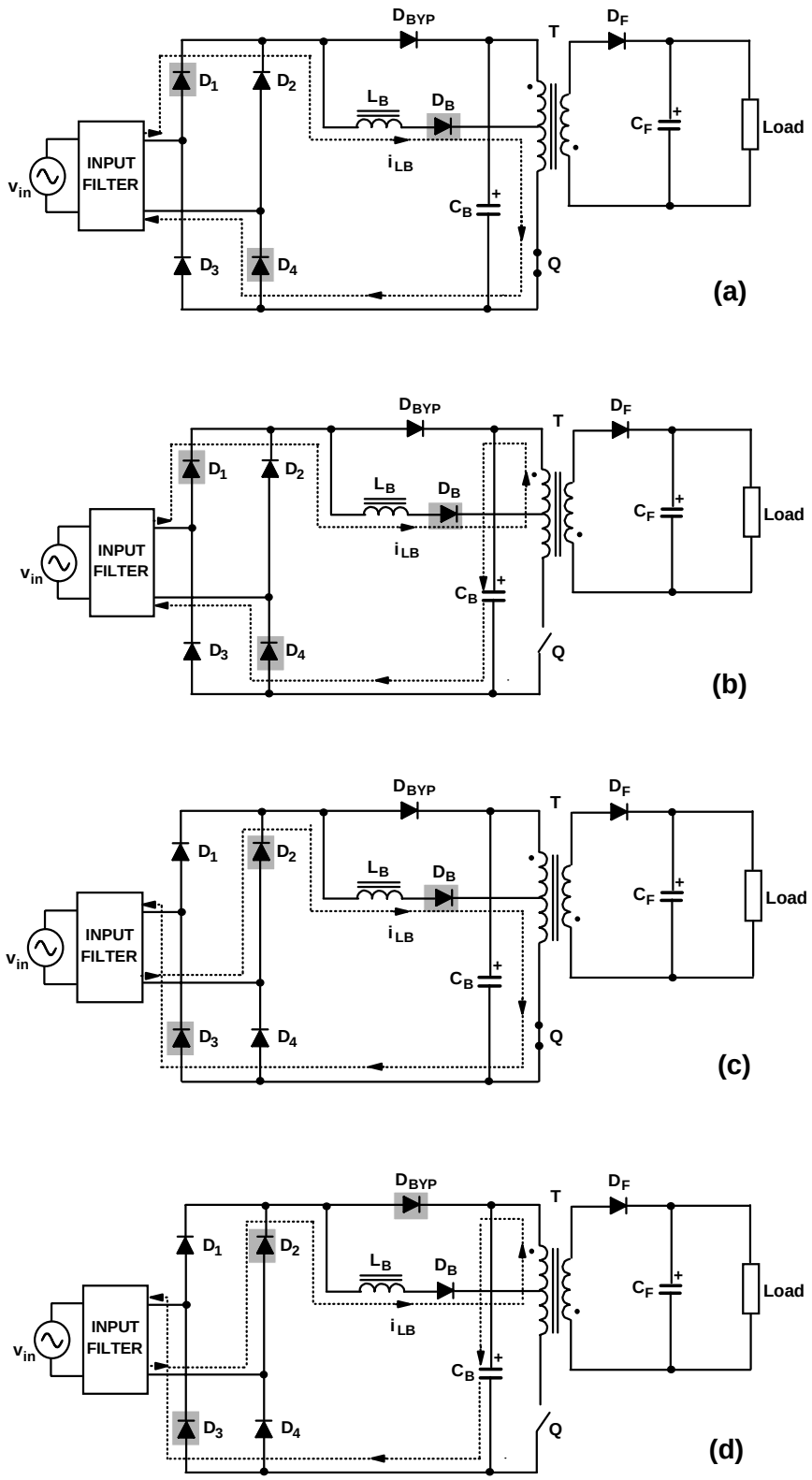

Fig. 3 Current paths of the boost inductor, L_B, in the original power stage: (a) $v_{in} > 0$, Q on; (b) $v_{in} > 0$, Q off; (c) $v_{in} < 0$, Q on; (d) $v_{in} < 0$, Q off.

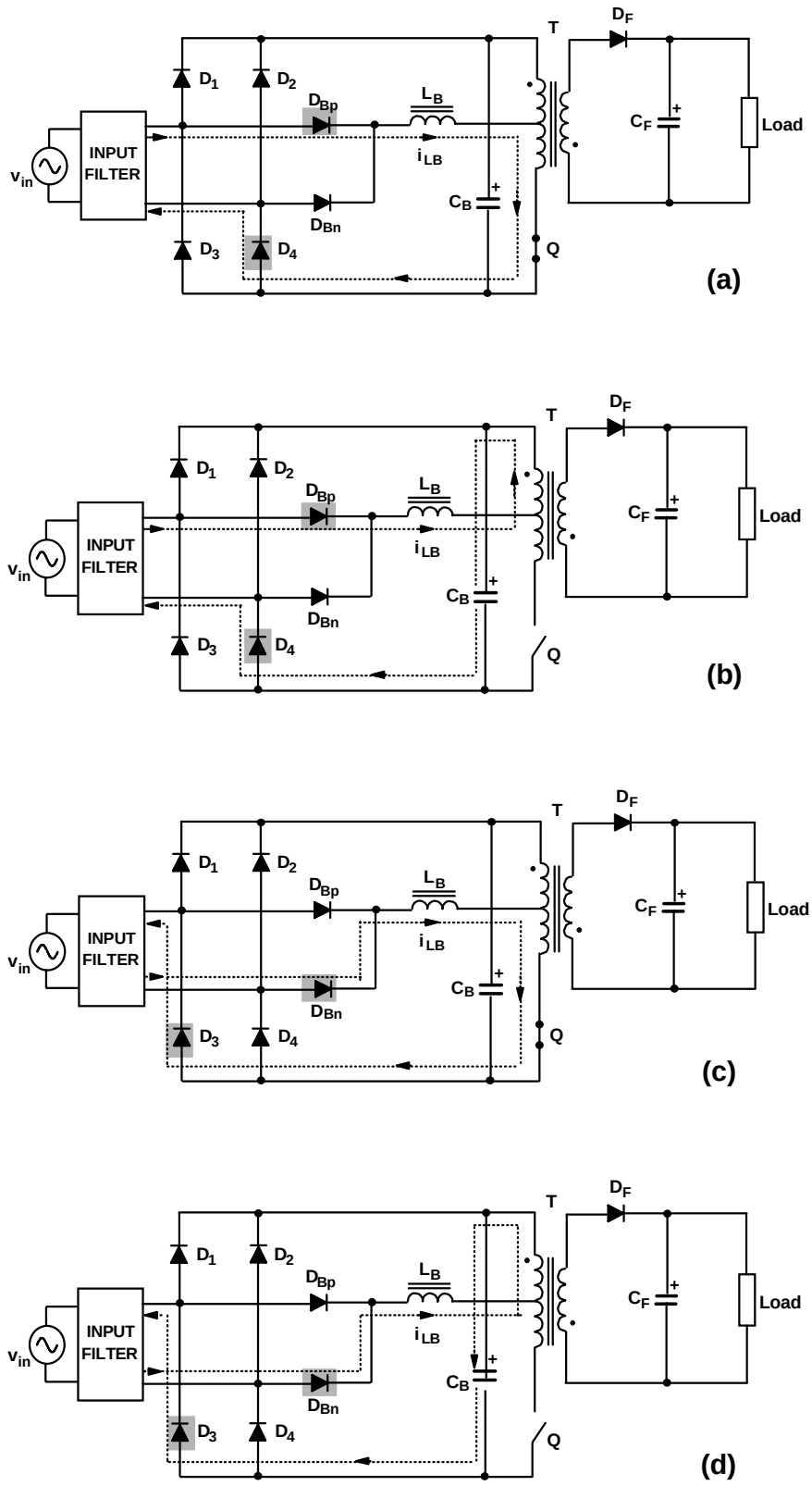

Fig. 4 Current paths of the boost inductor, L_B, in the improved power stage: (a) $v_{in} > 0$, Q on; (b) $v_{in} > 0$, Q off; (c) $v_{in} < 0$, Q on; (d) $v_{in} < 0$, Q off.

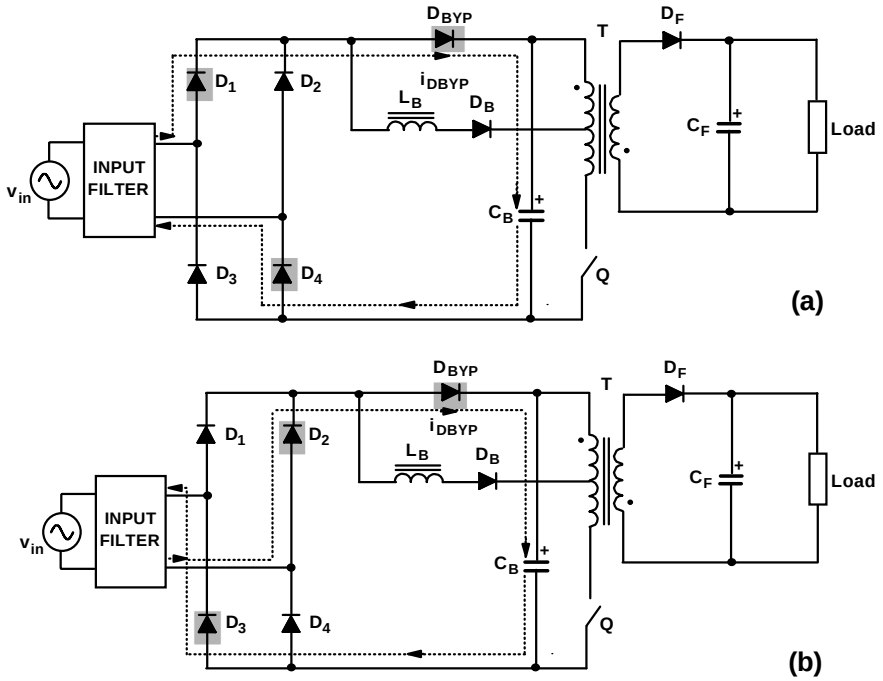

Fig. 5 Current paths of the bypass diode, D_{BYP}, in the original power stage: (a) $v_{in} > 0$, (b) $v_{in} > 0$.

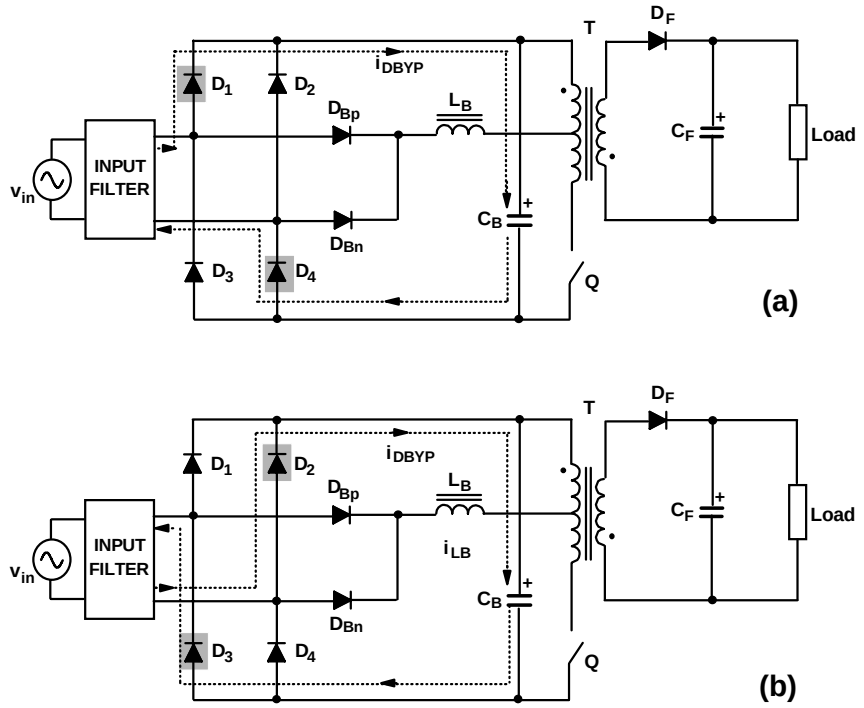

Fig. 6 Current paths of the bypass diodes, D_1 and D_2, in the improved power stage: (a) $v_{in} > 0$, (b) $v_{in} > 0$.

B. Control Circuit

The control circuit is based on the integrated controller L6565 from ST [3], [4]. The block diagram of the control circuit is shown in Fig. 7. The voltage-feedforward block, the voltage-feedback block, and the current-sensing block, R_{CS}, are the same as in a conventional flyback converter without PFC [3], [4]. The zero-crossing detector, the variable-reference-voltage block, and the auxiliary trigger circuit are additional blocks, necessary because of the heavy damping of the drain-source voltage ringing in the frequency-foldback mode of operation of the S2PFC flyback converter. Typical waveforms of the ringing drain-source voltage are shown in Fig. 8.

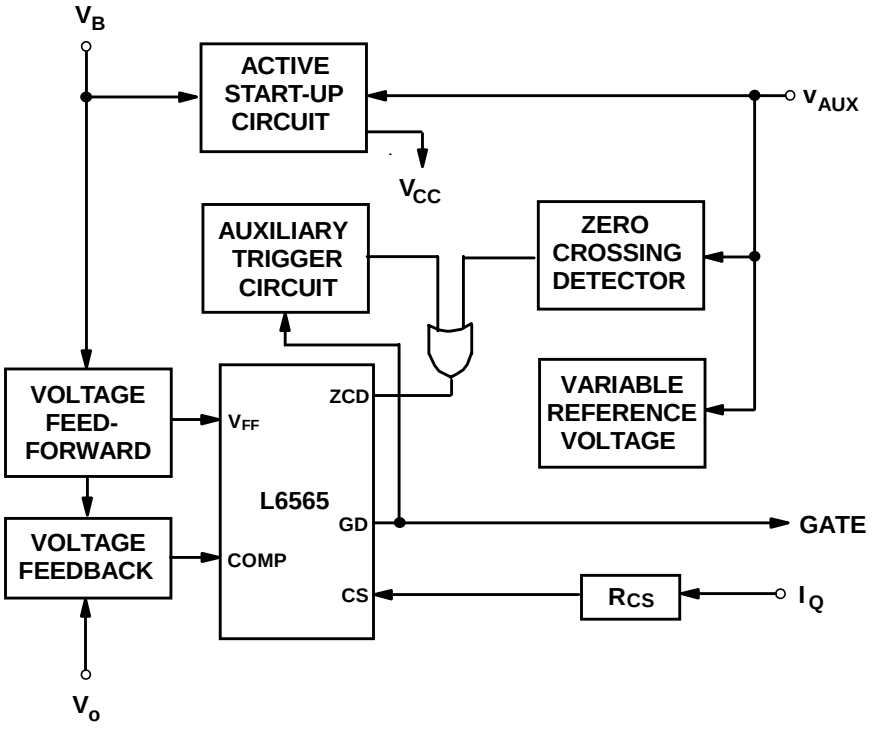

Fig. 7 Block diagram of the control circuit.

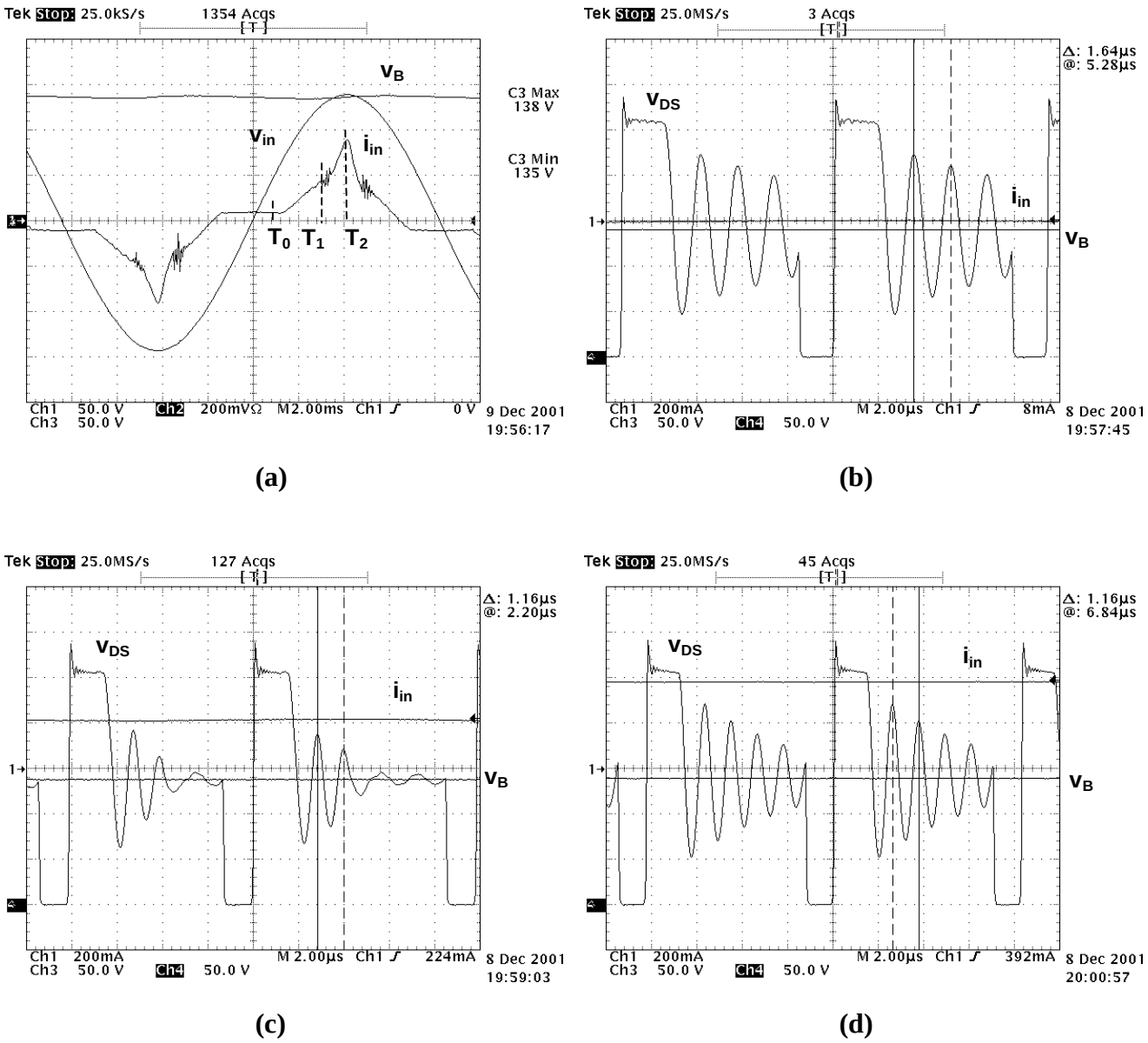

Fig. 8 Illustration of drain-source voltage ringing: (a) Line-voltage, line-current, and bulk voltage waveforms at 100 Vrms line and light load ($I_o = 0.5$ A); and waveforms of line current, bulk voltage, and drain-source voltage at instants (b) T_0, around the zero crossing of the line current, (c) T_1, when of the bypass diode is not conducting, and (d) T_2, around the peaking of the line current, when the bypass diode is conducting.

The additional zero-crossing detector is necessary because the internal zero-crossing detector of the L6565 controller chip has a hysteresis equal to 0.5 V, which is too large to detect the zero crossings when the amplitude of the ringing drain-source voltage becomes too small (because of the heavy damping). The external zero-crossing detector is implemented with the integrated comparator LM393, which has a very small hysteresis (±5mV). The circuit diagram of the external zero-crossing detector is shown in Fig. 9. It should be noticed in Fig. 9, that the reference voltage of the comparator (at pin 2 of LM393) is constant, slightly larger than zero.

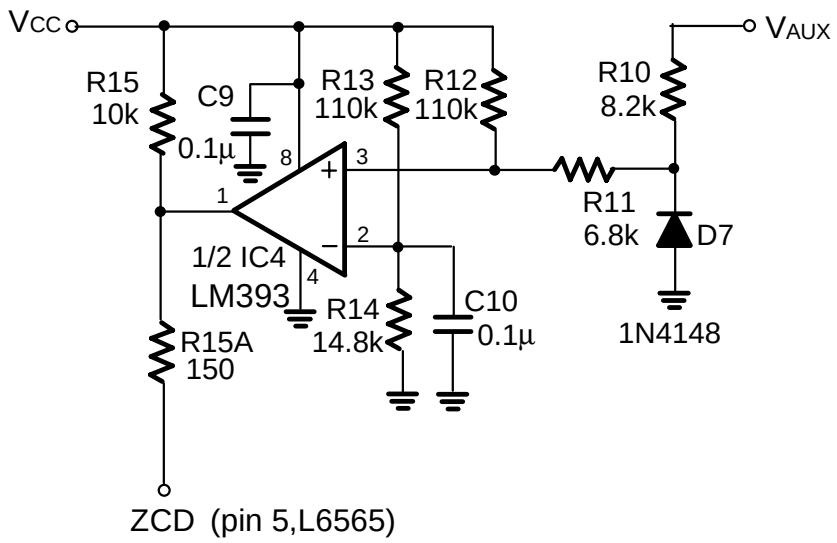

Fig. 9 Circuit diagram of the zero-current detector.

However, the additional comparator increases the total delay time from the zero-crossing instant to the turn-on instant of the switch, which deteriorates the valley switching. This is illustrated by the key waveforms of the control circuit without and with the additional comparator in Figs. 10 and 11. It can be seen in Fig. 10 that the delay time from the zero crossing of the auxiliary-winding voltage v_{AUX} to the turn-on instant of the switch in the control circuit without the additional comparator is approximately 500 ns. This results in almost ideal valley switching around the zero crossing of the line current and near valley switching around the peaking of the line current. The corresponding delay time in the control circuit with the additional comparator is approximately 700 ns, as shown in Fig. 11. This longer delay time results in poorer valley switching, especially around the peaking of the line current.

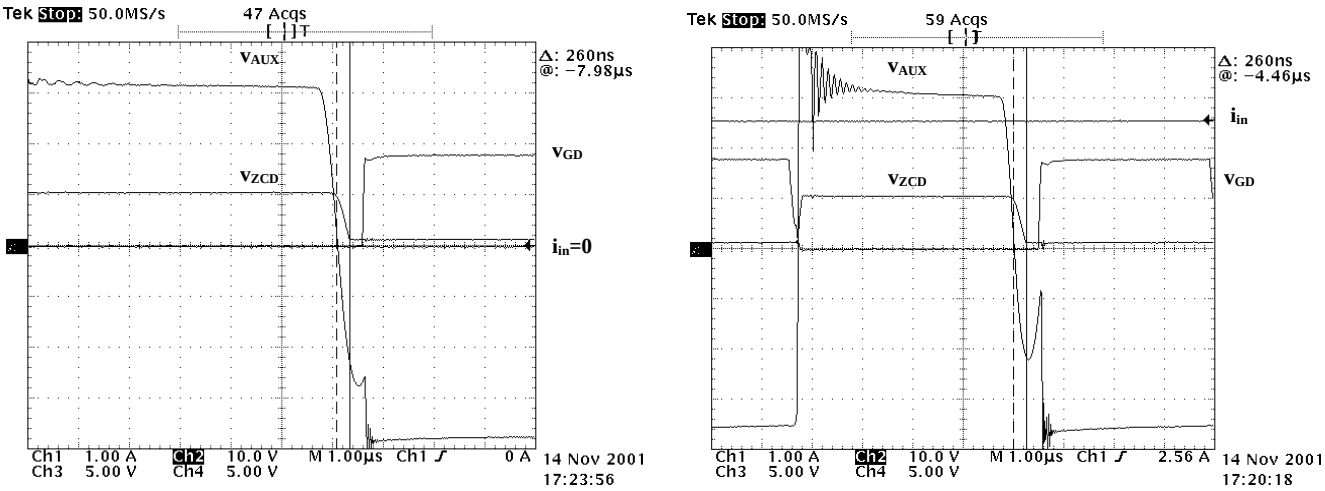

(a) **(b)**

Fig. 10 Key waveforms of the control circuit without additional zero-crossing comparator: auxiliary-winding voltage v_{AUX}, ZCD-pin voltage v_{ZCD}, and gate-drive voltage v_{GD} (a) around the zero crossing of the line current and (b) around the peaking of the line current, at 100-Vrms line voltage and full load (20 V/4.5 A).

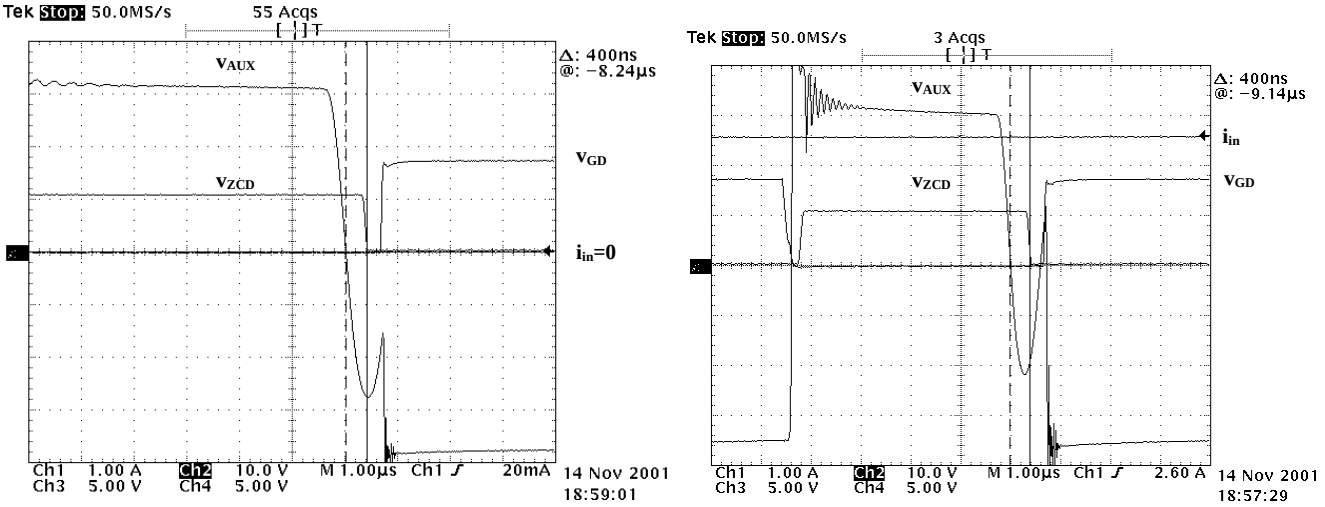

(a) **(b)**

Fig. 11 Key waveforms of the control circuit with additional zero-crossing comparator: auxiliary-winding voltage v_{AUX}, ZCD-pin voltage v_{ZCD}, and gate-drive voltage v_{GD} (a) around the zero crossing of the line current and (b) around the peaking of the line current, at 100-Vrms line voltage and full load (20 V/4.5 A).

The delay time of the additional comparator is compensated by moving the instant of the "zero-crossing" detection before the actual zero crossing instant of the auxiliary-winding voltage v_{AUX}. This is achieved by a variable reference voltage for the comparator. The implementation of the variable reference voltage is shown in Fig. 12. Key waveforms of the control circuit are shown in Fig. 13. As can be seen in Fig. 13, during the off time of the switch, the reference voltage is exponentially increased to approximately 75% of the auxiliary-winding voltage level. Therefore, the "zero-crossing" detection is achieved right after the drain-source voltage starts to decrease, i.e. before the actual zero-crossing instant. The delay time from the instant auxiliary-winding voltage v_{AUX} crosses reference voltage v_{REF} to the turn-on instant of the switch is again approximately 700 ns as in Fig. 11. However, as the same delay time starts earlier, the variable reference voltage results in a significantly better valley switching compared to that in Fig. 11.

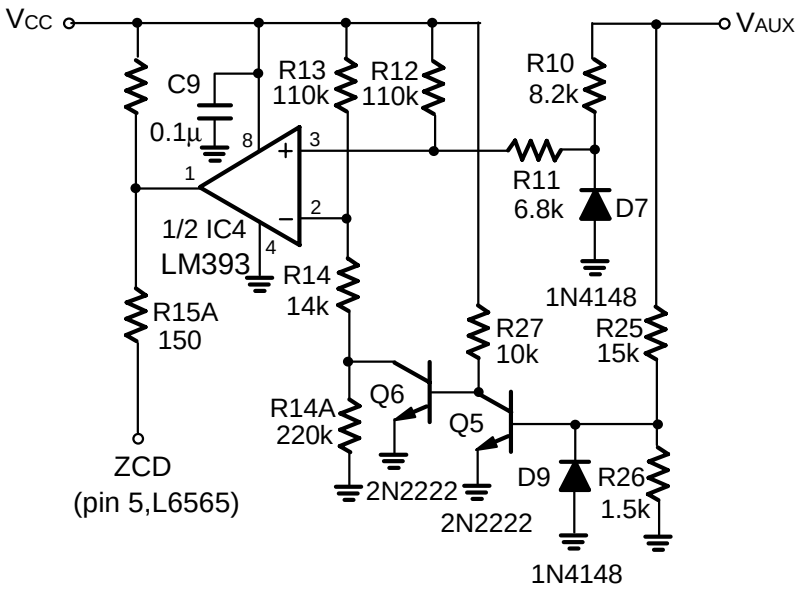

Fig. 12 Circuit diagram of the zero-current detector with variable reference voltage.

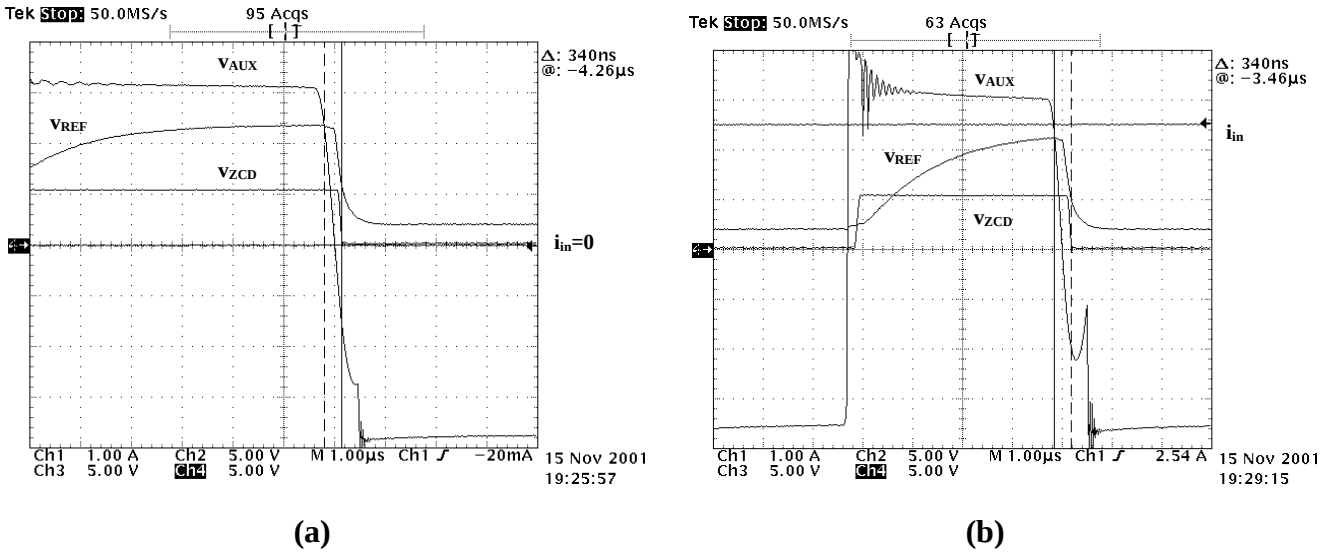

(a) **(b)**

Fig. 13 Key waveforms of the improved control circuit in Fig. 3: auxiliary-winding voltage v_{AUX}, ZCD pin voltage v_{ZCD} and reference voltage v_{REF} (a) around the zero crossing of the line current and (b) around the peaking of the line current, at 100-Vrms line voltage and full load (20 V/4.5 A).

However, even with an external zero-current detector, which has a very small hysteresis, the zero crossings of the auxiliary voltage, v_{AUX}, cannot be detected at very light loads, because of the heavy damping of the drain-source voltage ringing in the frequency-foldback mode of operation of the S2PFC flyback converter. This problem is solved by the auxiliary trigger circuit, which will turn on the switch if the zero-crossing detection signal is missing. The implementation of the auxiliary trigger circuit is shown in Fig. 14. Key waveforms that illustrate the operation of the auxiliary trigger circuit are shown in Fig. 15. The auxiliary trigger circuit generates trigger pulses synchronized to the beginning of the off time of the switch, with a constant delay equal to approximately 20 us. The 20-us delay time is just slightly longer than the maximum blanking time of the L6565 controller chip. The trigger pulses are obtained at the output of the comparator, which compares an exponential ramp voltage (at pin 6) with a constant reference voltage (at pin 5). When the amplitude of the drain-source voltage ringing becomes smaller than the hysteresis of the zero-crossing detector, like around instant T_1 in Fig. 15, the next gate pulse will be initiated by the auxiliary trigger circuit, at instant T_3 in Fig. 15, when the exponential ramp voltage reaches the level of the reference voltage and the negative-going edge at the output of the comparator, through the ZCD pin, activates the gate-drive output of the L6565 controller chip. For proper operation, prior to instant T_3, the voltage at the ZCD pin should change to a high logic level, like

at instant T_2 in Fig. 15. This is achieved by adjusting the reference voltage of the zero-crossing detector in Fig. 12 to generate a high logic level when the auxiliary-winding voltage is equal to zero.

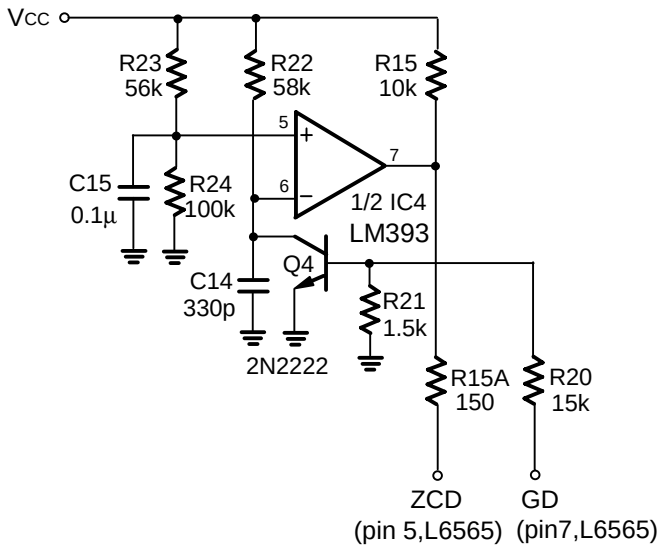

Fig. 14 Circuit diagram of the auxiliary trigger circuit.

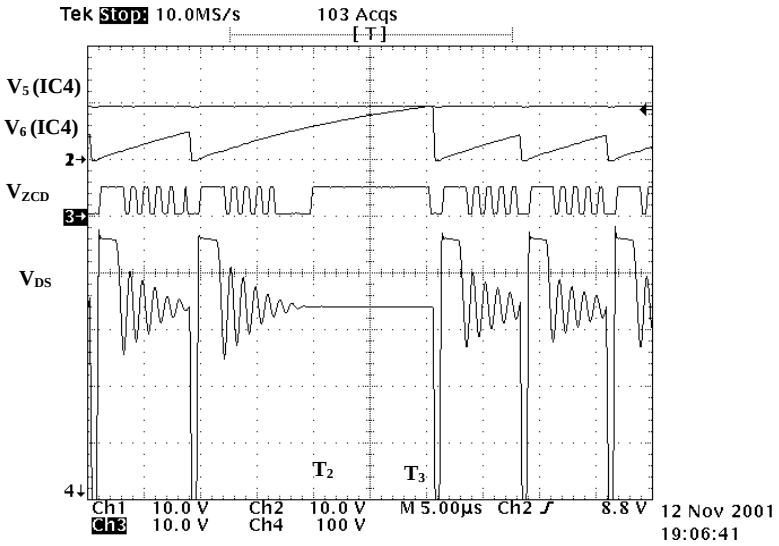

Fig. 15 Key waveforms of the auxiliary trigger circuit: reference voltage at pin 5 of the comparator (IC 4), exponential ramp voltage at pin 6 of the comparator (IC 4), voltage at pin ZCD of L6565, and drain-source voltage.

At very light loads, when the feedback voltage at the COMP pin of the L6565 controller chip decreases to approximately 2.5 V, the L6565 controller enters the burst-mode of operation. In the burst-mode of operation, the controller chip generates bunches of gate pulses with a low frequency equal to the starter frequency (typically 2.5 kHz). The burst mode of operation is illustrated in Figs. 16 and 17 with waveforms measured at 264-Vrms line voltages, at a very light load (~ 100 mA) and at zero load. In the worst case, at high line, the circuit starts to operate in the burst mode at loads below 180 mA. At the low line, the boundary of the burst-mode of operation is at loads below 20 mA.

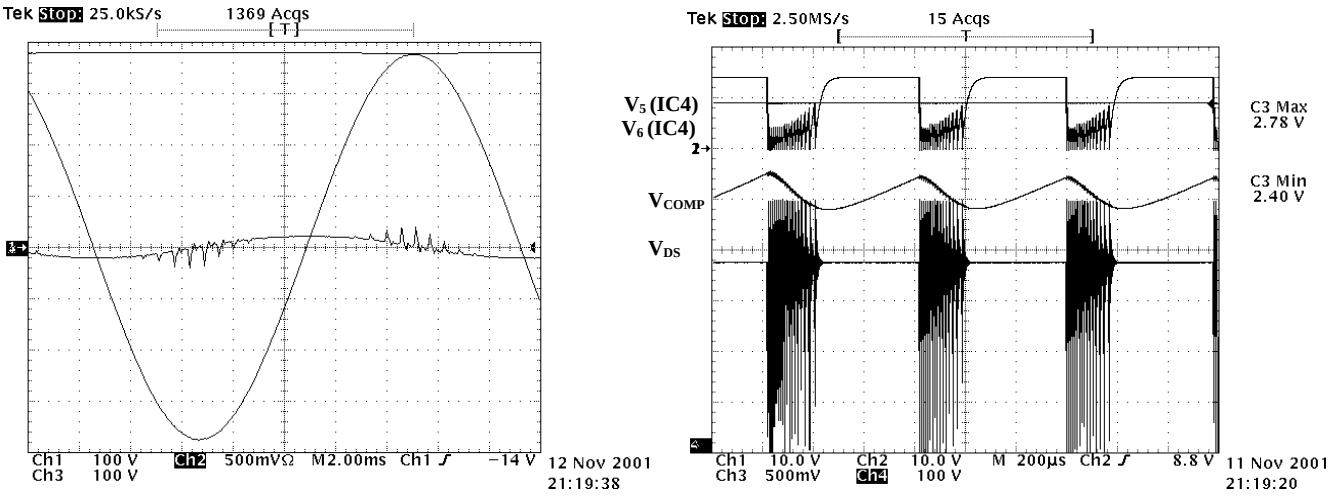

(a) **(b)**

Fig. 16 Waveforms of (a) line-voltage, line-current, and bulk-voltage; and of (b) reference voltage at pin 5 and exponential ramp voltage at pin 6 of the comparator, voltage at pin COMP of L6565, and drain-source voltage at high line (264 Vrms), at very light load (I_o = 0.1 A).

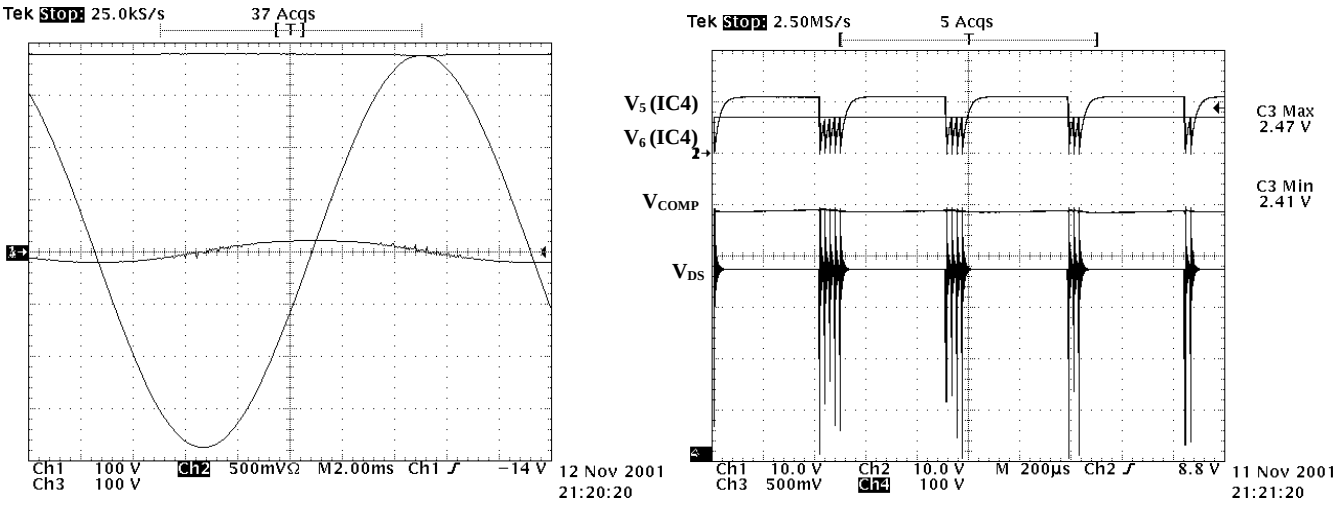

(a) **(b)**

Fig. 17 Waveforms of (a) line-voltage, line-current, and bulk-voltage; and of (b) reference voltage at pin 5 and exponential ramp voltage at pin 6 of the comparator, voltage at pin COMP of L6565, and drain-source voltage at high line (264 Vrms), at zero load.

C. Complete Circuit Diagram

The complete circuit diagram is shown on a separate page.

II. MEASUREMENTS

TABLE I – Full-load measurements (V_o = 19.5V, I_o = 4.5A) at T_{amb} = 23 °C

V_{in} [Vrms]	PF	THD [%]	V_B (DVM)	V_B (Scope)	η [%]	f_{SW} [kHz]
90	0.913	41.4	121	108-131	87.9	65-110
100	0.913	42.2	136	124-146	88.5	72-123
115	0.917	41.4	158	148-167	89.1	77-137
132	0.920	40.8	183	175-191	89.5	89-151
180	0.908	44.1	258	250-264	89.7	108-169
200	0.900	45.7	291	284-296	89.6	116-170
230	1.891	47.3	339	332-344	89.2	123-173
264	0.879	48.5	394	388-396	88.5	130-177

TABLE II – Measured line-current harmonics at full load and nominal low- and high lines

V_{in} = 100 V_{rms}			
No.	IEC1000-3-2 Class-D **Limit** [mA/W]	**Measured** [mA/W]	[% of Limit]
3	7.82	3.983	50.9
5	4.37	0.873	20.0
7	2.3	0.442	19.2
9	1.15	0.884	76.9
11	0.805	0.626	77.7
13	0.681	0.410	60.2
15	0.59	0.276	46.8
17	0.521	0.229	44.0
19	0.466	0.153	32.9
21	0.422	0.093	22.1
23	0.385	0.085	22.1
25	0.354	0.065	18.5
27	0.328	0.054	16.6
29	0.305	0.046	15.0
31	0.286	0.029	10.2
33	0.268	0.024	9.9
35	0.253	0.017	6.7
37	0.239	0.013	5.5
39	0.227	0.018	7.8

V_{in} = 230 V_{rms}			
No.	IEC1000-3-2 Class-D **Limit** [mA/W]	**Measured** [mA/W]	[% of Limit]
3	3.4	2.063	60.7
5	1.9	0.239	12.6
7	1.0	0.077	7.7
9	0.5	0.077	15.4
11	0.35	0.0167	4.8
13	0.296	0.0390	13.2
15	0.257	0.0260	10.1
17	0.227	0.0046	2.0
19	0.203	0.0092	4.6
21	0.183	0.0145	7.9
23	0.167	0.0029	1.7
25	0.154	0.0136	8.9
27	0.143	0.0075	5.2
29	0.133	0.0013	1.0
31	0.124	0.0075	6.0
33	0.117	0.0044	3.8
35	0.11	0.0058	5.2
37	0.104	0.0105	10.1
39	0.1	0.0040	39.6

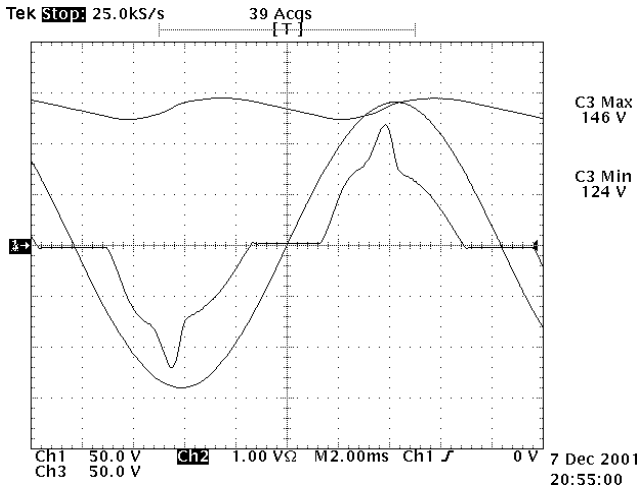

(a)

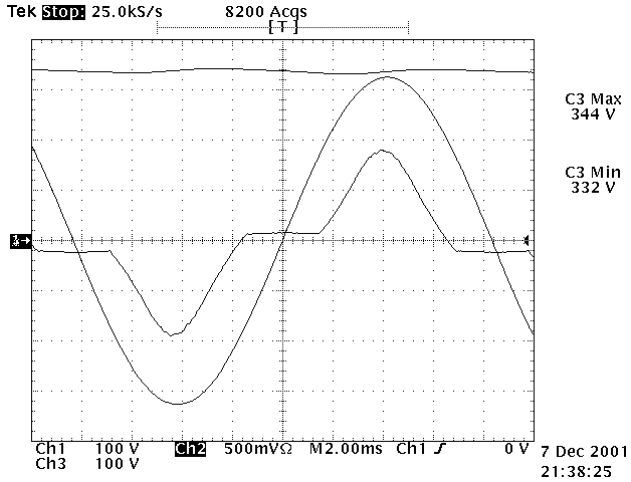

(b)

Fig. 18 Line-voltage, line-current, and bulk-voltage waveforms at full load at (a) nominal low-line (100 Vrms) and (b) nominal high-line (230 Vrms).

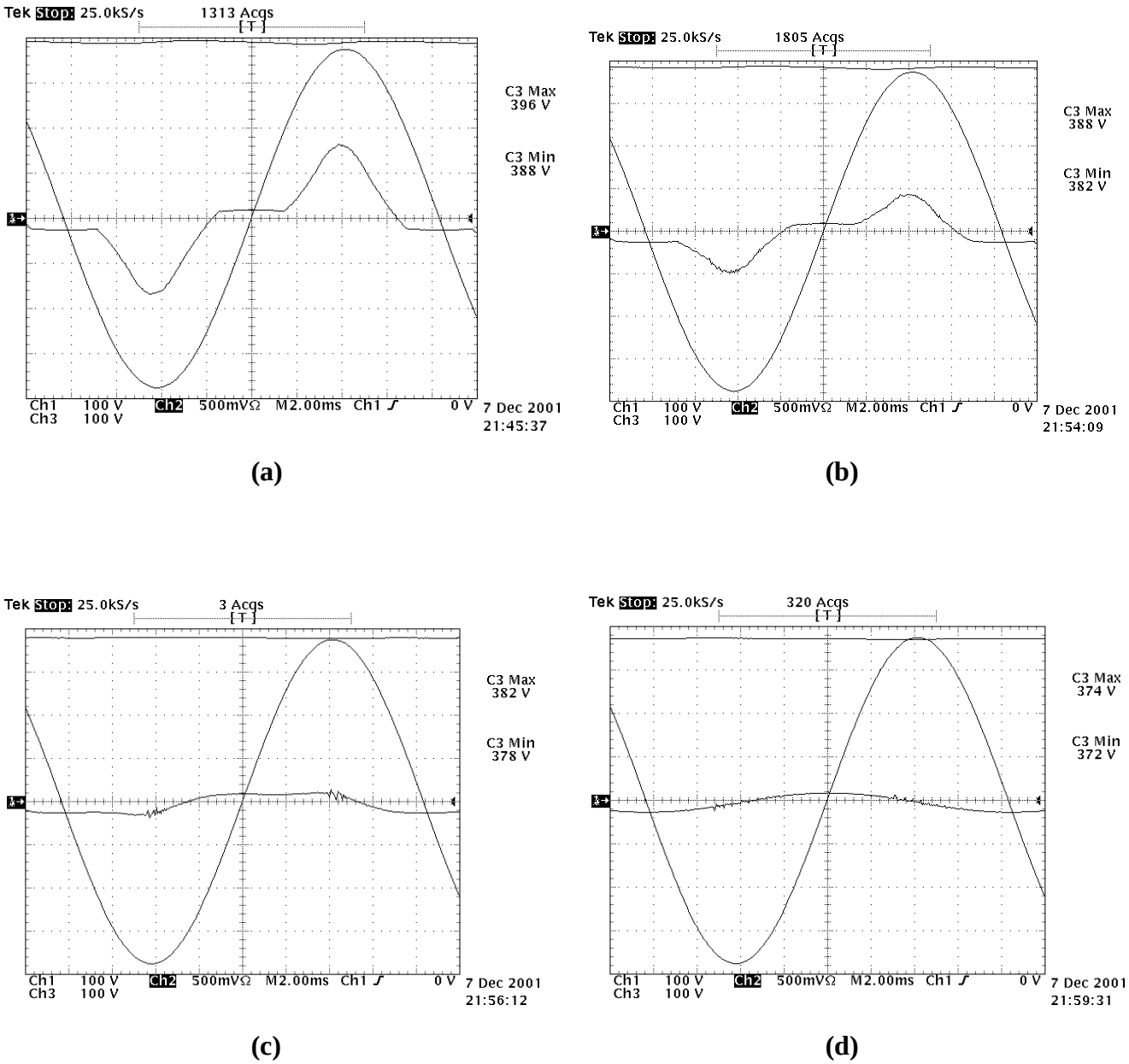

Fig. 19 Line-voltage, line-current, and bulk-voltage waveforms at high line (264 Vrms) at (a) 100% load, I_o = 4.5 A, (b) 50% load, I_o = 2.25 A, (c) 10% load, I_o = 0.45 A, and (d) no load.

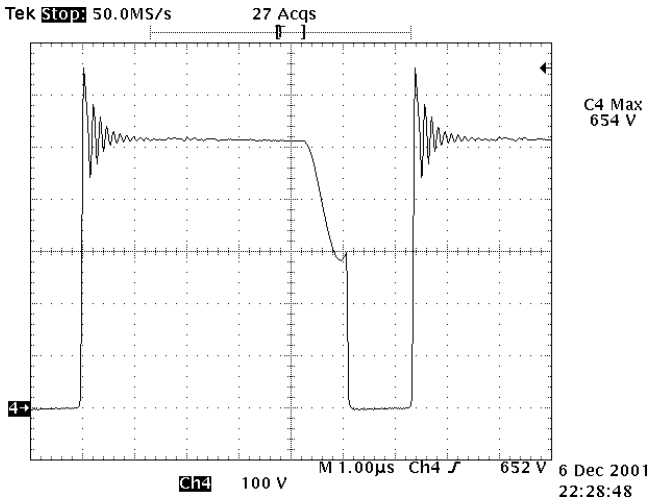

Fig. 20 Drain-source voltage waveform at high line (264 Vrms) and full load.

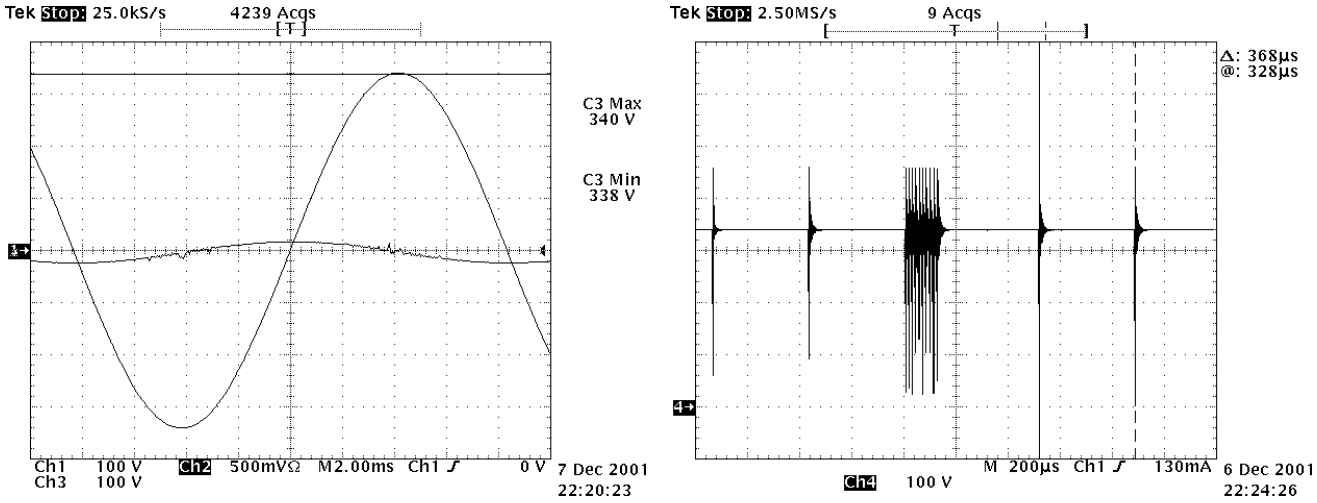

(a) **(b)**

Fig. 21 Waveforms of (a) line-voltage, line-current, bulk-voltage, and (b) drain-source voltage at 240 Vrms line and zero load.

III. SUMMARY

Key characteristics of the 90-W adapter with S2PFC flyback can be summarized as follows:

8. Worst-case efficiency (low line, full load) ~ 88% - see Table I;
9. Line current harmonics satisfy the standard requirements with a large margin (>20%) –see Table II;
10. Bulk voltage is always below 400 V:
    a) Maximum bulk voltage (at high line and full load) is 396 V – see Fig. 19(a),
    b) Bulk voltage at high line and no load is 374 V – see Fig. 19(d);
11. Input power at 240-Vrms line voltage and no load is ~ 700 mW (670-700 mW);
12. Input power at 115-Vrms line voltage and no load is ~ 625 mW (610-640 mW);
13. Switching frequency variations:
    a) Switching frequency range at full load is 65-177 kHz,
    b) Maximum switching frequency is 228 kHz (at high line and 2.7-A load);
14. Maximum drain-source voltage is 654 V (first turn-off spike at high line) – see Fig. 20.

IV. REFERENCES

[1] M.M. Jovanovi and L. Huber, "Ac/dc flyback converter with improved power factor and reduced switching loss," U.S. Patent No. 5991172, Nov. 1999.

[2] L. Huber and M.M. Jovanovi , "Single-stage, single-switch input-current-shaping technique with reduced switching loss," *IEEE Applied Power Electronics Conference (APEC) Proc.*, pp. 98-104, Mar. 1999.

[3] - , "L6565 quasi-resonant controller," *ST Microelectronics*, Jan. 2001.

[4] C. Adragna, "Design of offline quasi-resonant flyback converters with L6565," AN1326, *ST Microelectronics*, Jan. 2001.